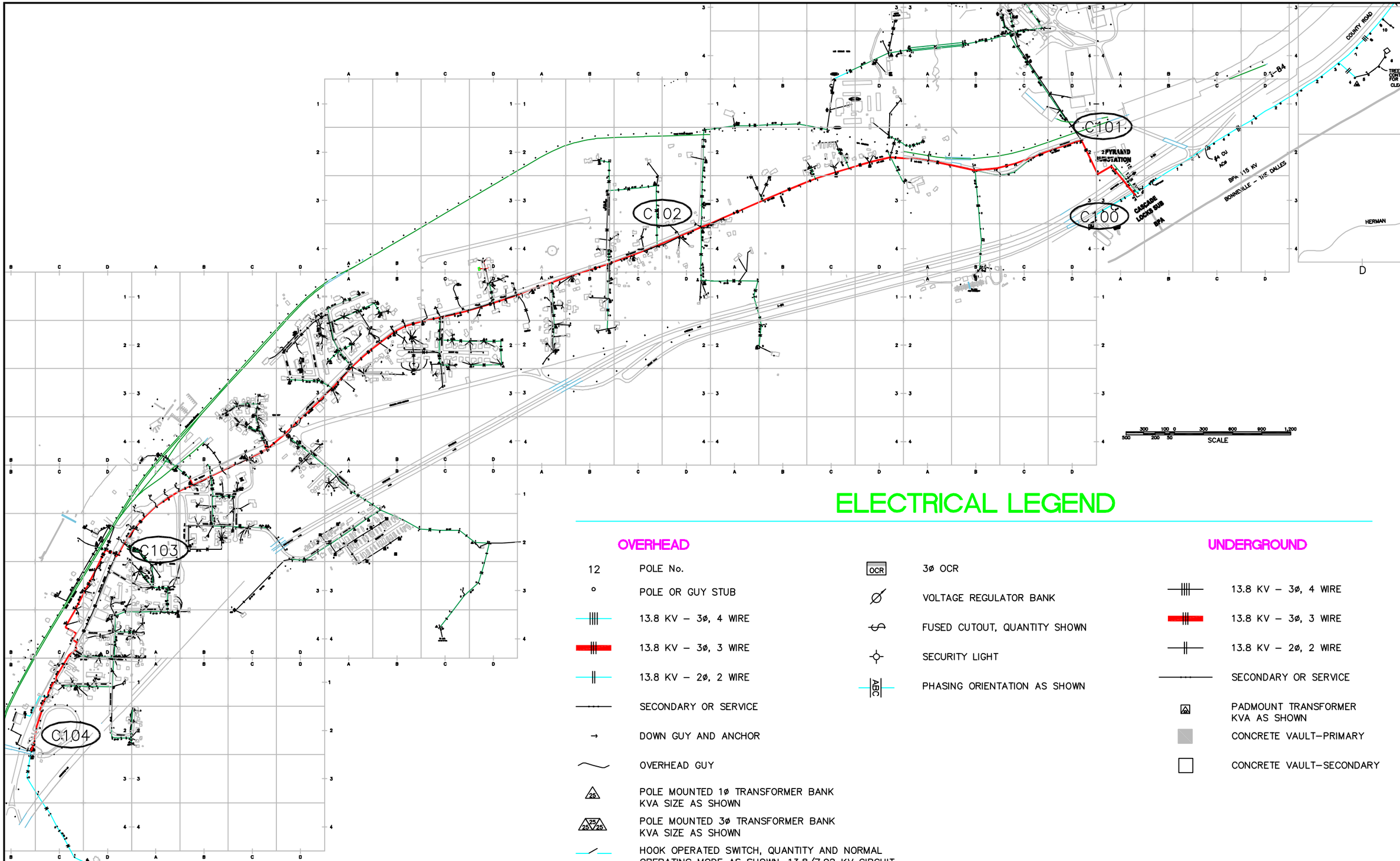

ELECTRICAL LEGEND

OVERHEAD

- 12 — POLE No.
- POLE OR GUY STUB
- 13.8 KV – 3ø, 4 WIRE
- 13.8 KV – 3ø, 3 WIRE
- 13.8 KV – 2ø, 2 WIRE
- SECONDARY OR SERVICE
- DOWN GUY AND ANCHOR
- OVERHEAD GUY
- POLE MOUNTED 1ø TRANSFORMER BANK KVA SIZE AS SHOWN
- POLE MOUNTED 3ø TRANSFORMER BANK KVA SIZE AS SHOWN
- HOOK OPERATED SWITCH, QUANTITY AND NORMAL OPERATING MODE AS SHOWN, 13.8/7.92 KV CIRCUIT
- GANG–OPERATED SWITCH, NORMAL OPERATING MODE AS SHOWN, 13.8/7.92 KV CIRCUIT
- OCR — 3ø OCR
- VOLTAGE REGULATOR BANK
- FUSED CUTOUT, QUANTITY SHOWN
- SECURITY LIGHT
- ABC — PHASING ORIENTATION AS SHOWN

UNDERGROUND

- 13.8 KV – 3ø, 4 WIRE
- 13.8 KV – 3ø, 3 WIRE
- 13.8 KV – 2ø, 2 WIRE
- SECONDARY OR SERVICE
- PADMOUNT TRANSFORMER KVA AS SHOWN
- CONCRETE VAULT–PRIMARY
- CONCRETE VAULT–SECONDARY

REV	DATE	REVISION DESCRIPTION	DESIGNER	REVIEWER
1	12-24-13	UPDATED TITLE BLOCK	LNS	

Brown & Kysar, Inc.
Engineering & Consulting
t(360) 687.3966 | f(360) 687.5139

BKI PROJECT NO: CL12-006
CONTRACT NO:

THIS LINE IS 1" LONG AT THE CORRECT SCALE

SYSTEM MAPS
CITY 3-PHASE FEEDER

CITY OF CASCADE LOCKS
140 SW WaNaPa
CASCADE LOCKS, OR 97014

1 REVISION

A-1

G:\Cascade Locks\00 PROJECTS\CL13-002 CL Master Plan\00 PROJECT MANAGEMENT\2013 Master Plan\03 System analysis\Maps\CL-SYSTEM-MAP.dwg, Larry Stuckman, 6/19/2014 2:25 PM

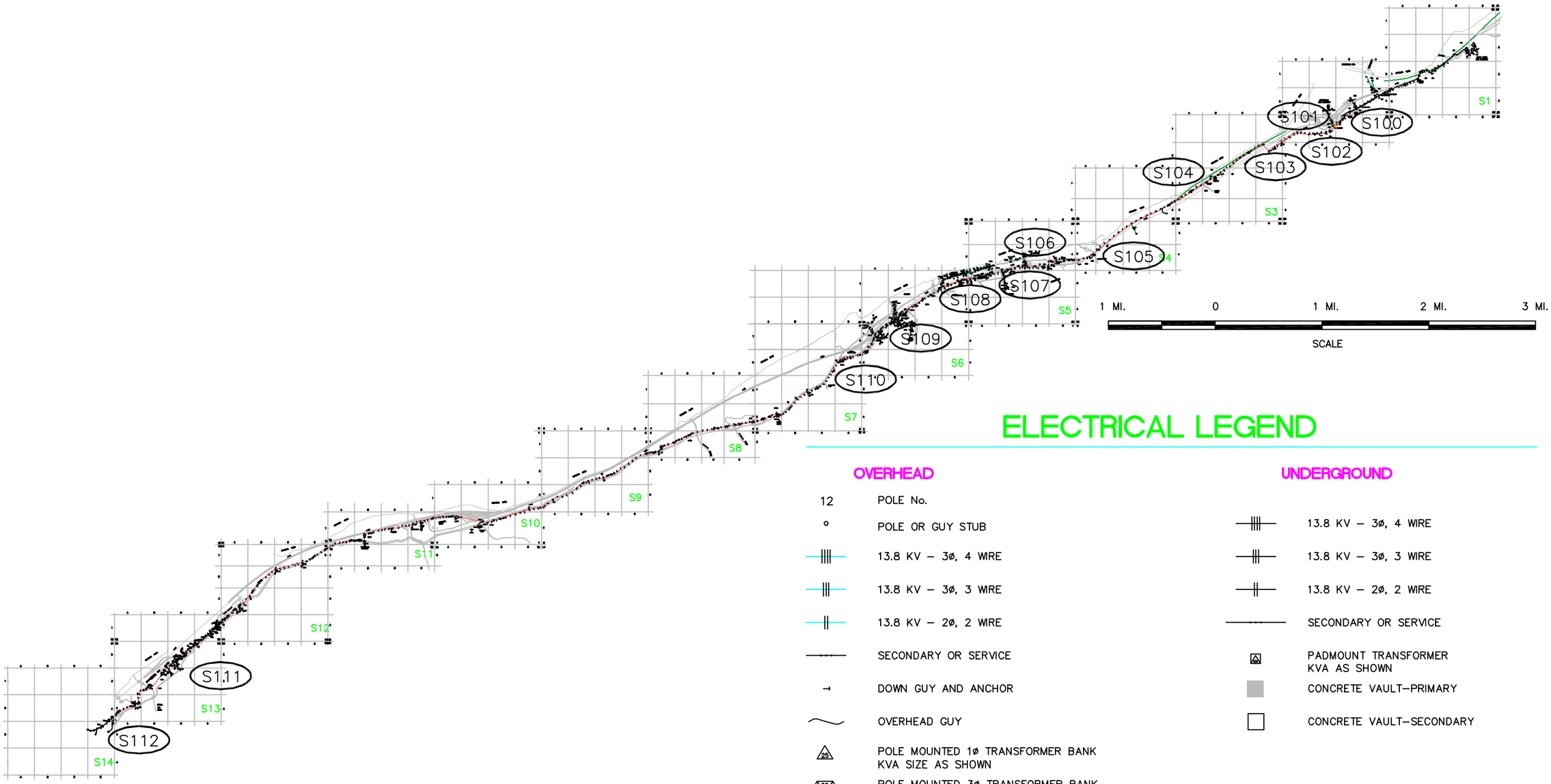

ELECTRICAL LEGEND

OVERHEAD

- 12 — POLE No.
- POLE OR GUY STUB
- 13.8 KV – 3ø, 4 WIRE
- 13.8 KV – 3ø, 3 WIRE
- 13.8 KV – 2ø, 2 WIRE
- SECONDARY OR SERVICE
- DOWN GUY AND ANCHOR
- OVERHEAD GUY
- 25 — POLE MOUNTED 1ø TRANSFORMER BANK KVA SIZE AS SHOWN
- 25 25 25 — POLE MOUNTED 3ø TRANSFORMER BANK KVA SIZE AS SHOWN
- HOOK OPERATED SWITCH, QUANTITY AND NORMAL OPERATING MODE AS SHOWN, 13.8/7.92 KV CIRCUIT
- GANG–OPERATED SWITCH, NORMAL OPERATING MODE AS SHOWN, 13.8/7.92 KV CIRCUIT
- OCR — 3ø OCR
- VOLTAGE REGULATOR BANK
- FUSED CUTOUT, QUANTITY SHOWN
- SECURITY LIGHT
- ABC — PHASING ORIENTATION AS SHOWN

UNDERGROUND

- 13.8 KV – 3ø, 4 WIRE
- 13.8 KV – 3ø, 3 WIRE
- 13.8 KV – 2ø, 2 WIRE
- SECONDARY OR SERVICE
- PADMOUNT TRANSFORMER KVA AS SHOWN
- CONCRETE VAULT–PRIMARY
- CONCRETE VAULT–SECONDARY

REV	DATE	REVISION DESCRIPTION	DESIGNER	REVIEWER
1	12-24-13	UPDATED TITLE BLOCK	LNS	

Brown & Kysar, Inc.
Engineering & Consulting
(360) 687-3866 | (360) 687-5139

BKI PROJECT NO: CL12-006
CONTRACT NO:

THIS LINE IS 1" LONG AT THE CORRECT SCALE

SYSTEM MAPS
SOUTHBANK FEEDER

CITY OF CASCADE LOCKS
140 SW WaNaPa
CASCADE LOCKS, OR 97014

REVISION 0

A-2

K:\Cascade Locks\00 PROJECTS\CL13-002 CL Master Plan\05 LBP\2013 Master Plan\03 System analysis\Maps\CL-SYSTEM-MAP.dwg, Larry Stuckman, 9/30/2014 8:29 AM

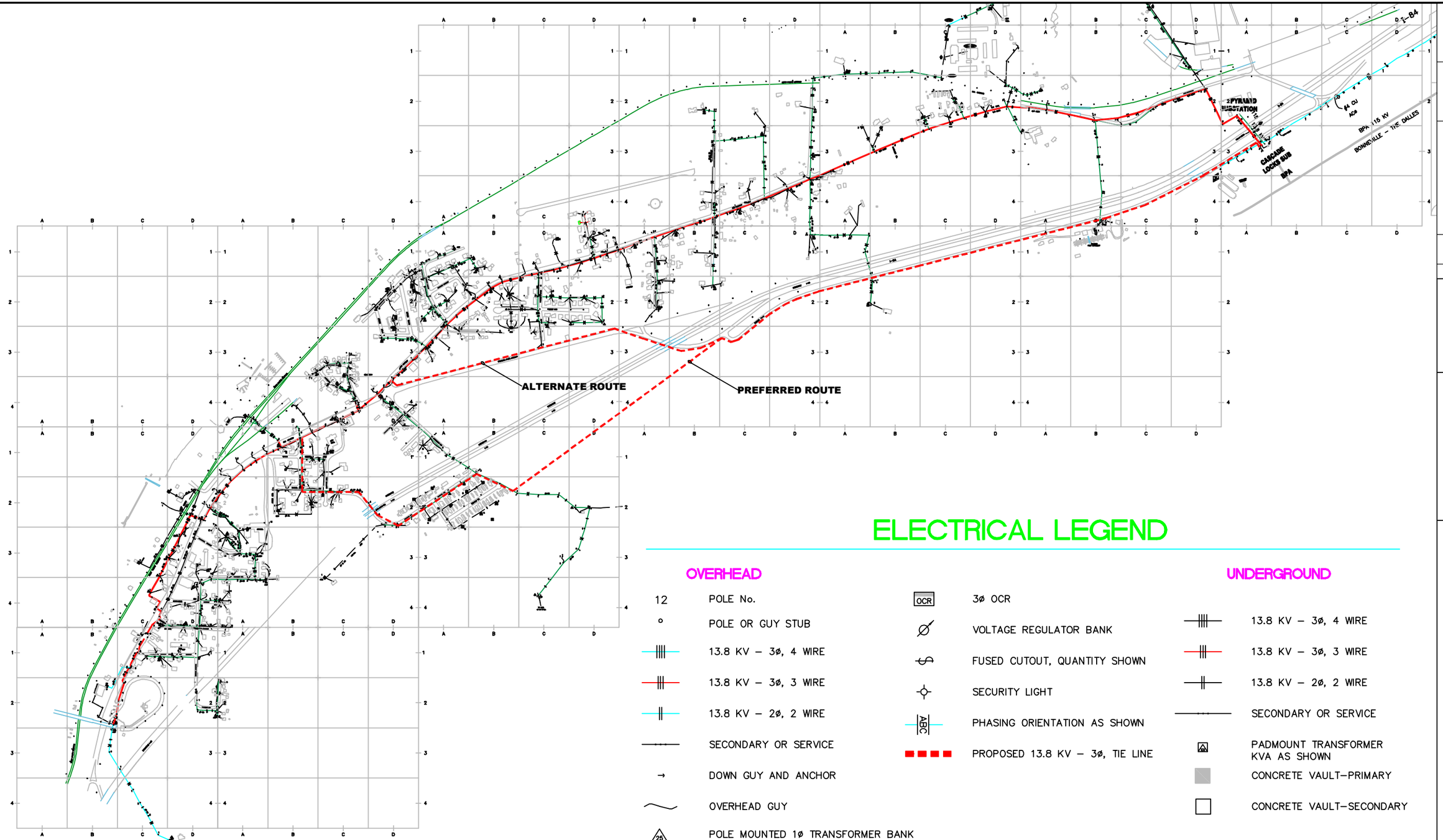

ELECTRICAL LEGEND

OVERHEAD

- 12 — POLE No.
- POLE OR GUY STUB
- 13.8 KV – 3ø, 4 WIRE
- 13.8 KV – 3ø, 3 WIRE
- 13.8 KV – 2ø, 2 WIRE
- SECONDARY OR SERVICE
- DOWN GUY AND ANCHOR
- OVERHEAD GUY
- 25 — POLE MOUNTED 1ø TRANSFORMER BANK KVA SIZE AS SHOWN
- 25 25 25 — POLE MOUNTED 3ø TRANSFORMER BANK KVA SIZE AS SHOWN
- HOOK OPERATED SWITCH, QUANTITY AND NORMAL OPERATING MODE AS SHOWN, 13.8/7.92 KV CIRCUIT
- GANG OPERATED SWITCH, NORMAL OPERATING MODE AS SHOWN, 13.8/7.92 KV CIRCUIT
- OCR — 3ø OCR
- VOLTAGE REGULATOR BANK
- FUSED CUTOUT, QUANTITY SHOWN
- SECURITY LIGHT
- ABC — PHASING ORIENTATION AS SHOWN
- PROPOSED 13.8 KV – 3ø, TIE LINE

UNDERGROUND

- 13.8 KV – 3ø, 4 WIRE
- 13.8 KV – 3ø, 3 WIRE
- 13.8 KV – 2ø, 2 WIRE
- SECONDARY OR SERVICE
- PADMOUNT TRANSFORMER KVA AS SHOWN
- CONCRETE VAULT–PRIMARY
- CONCRETE VAULT–SECONDARY

REV	DATE	REVISION DESCRIPTION	DESIGNER	REVIEWER

Brown & Kysar, Inc.
Engineering & Consulting
t(360) 687.3966 | f(360) 687.5139

BKI PROJECT NO: CL12-006
CONTRACT NO:

THIS LINE IS 1" LONG AT THE CORRECT SCALE

SYSTEM MAPS
CITY 3-PHASE LOOP ROUTE

CITY OF CASCADE LOCKS
140 SW WaNaPa
CASCADE LOCKS, OR 97014

0 REVISION

B

1 / 1

K:\Cascade Locks\00 PROJECTS\CL13-002 CL Master Plan\00 PROJECT MANAGEMENT\2013 Master Plan\03 System analysis\Maps\CL-SYSTEM-MAP - Dist loop.dwg, Larry Stuckman, 9/2/2014 1:57 PM

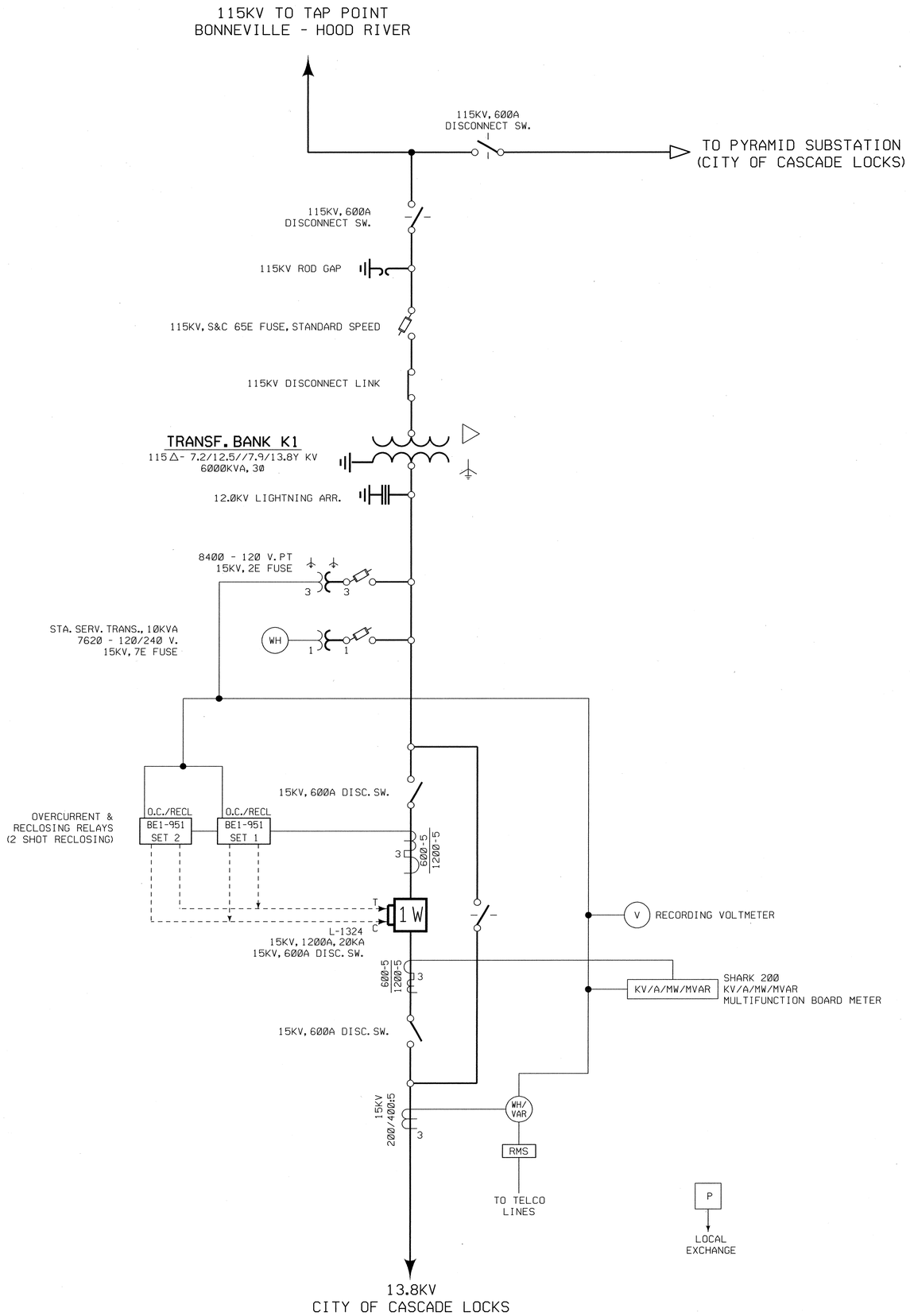

RR#7885	6	R	224583	REVISED BY RR GROUP PER FIELD MODIFICATION	JAW	09/03/10		GLW
	5	FA	224583	REPL'D PCB 1W, O.C. & RECLR RELAYS. REVISION 4 DATED 8/12/03 CONVERTED TO CAD.	DA	05/20/09	TEJ	MPM
	NO.	FA	W.O. 224583	COMPUTER REVISION ONLY	BY	DATE	APPROVED	

C=CONTRACT CONSTRUCTION, FA=FORCE ACCOUNT CONSTRUCTION, R=RECORD

109947-SOE-A3	1	CONSTRUCTION ONE LINE DIAGRAM
DRAWING NUMBER	SHEET	TITLE

REFERENCE DRAWINGS

DSGN BPA
DRWN DA/JAM
CHKD TEJ/DA
REVW
CNCR
APPR MIKE P.MILLER
DATE 05/20/09

UNITED STATES DEPARTMENT OF ENERGY
BONNEVILLE POWER ADMINISTRATION
HEADQUARTERS, PORTLAND, OREGON

CASCADE LOCKS SUBSTATION ONE LINE DIAGRAM

C-1

SERIAL	SOURCE	SIZE	SHEET	REVISION
110000	SCP	A1	1 OF 1	6

DATE

NOTES:
1. 'A' NOS, (E.G. A520) REFER TO CONSTRUCTION STANDARD DWGS & ARE USED FOR DESIGN PASTE-UP ONLY. A-534
2 CONTRACTOR TO INSTALL ALL STEEL STRUCTURES. ALL OTHER EQUIPMENT WILL BE DONE BY THE GOVERNMENT.

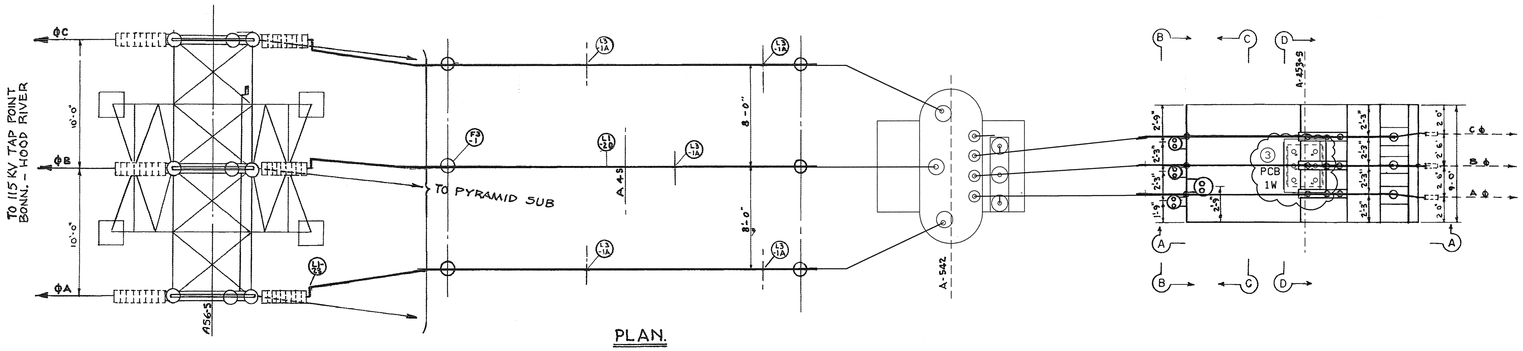

PLAN.

NOTE:
SIL-FOS NEUTRAL CONNECTIONS. SEE DETAIL N ON DWG 00-343-D238, SERIAL 60094.

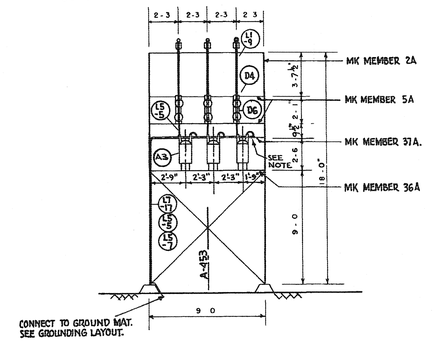

SECTION B-B

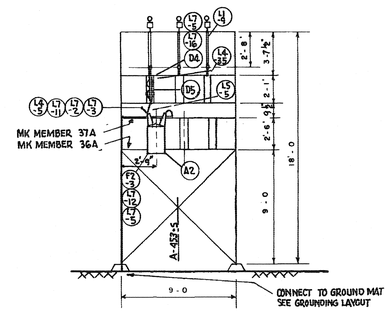

SECTION C-C

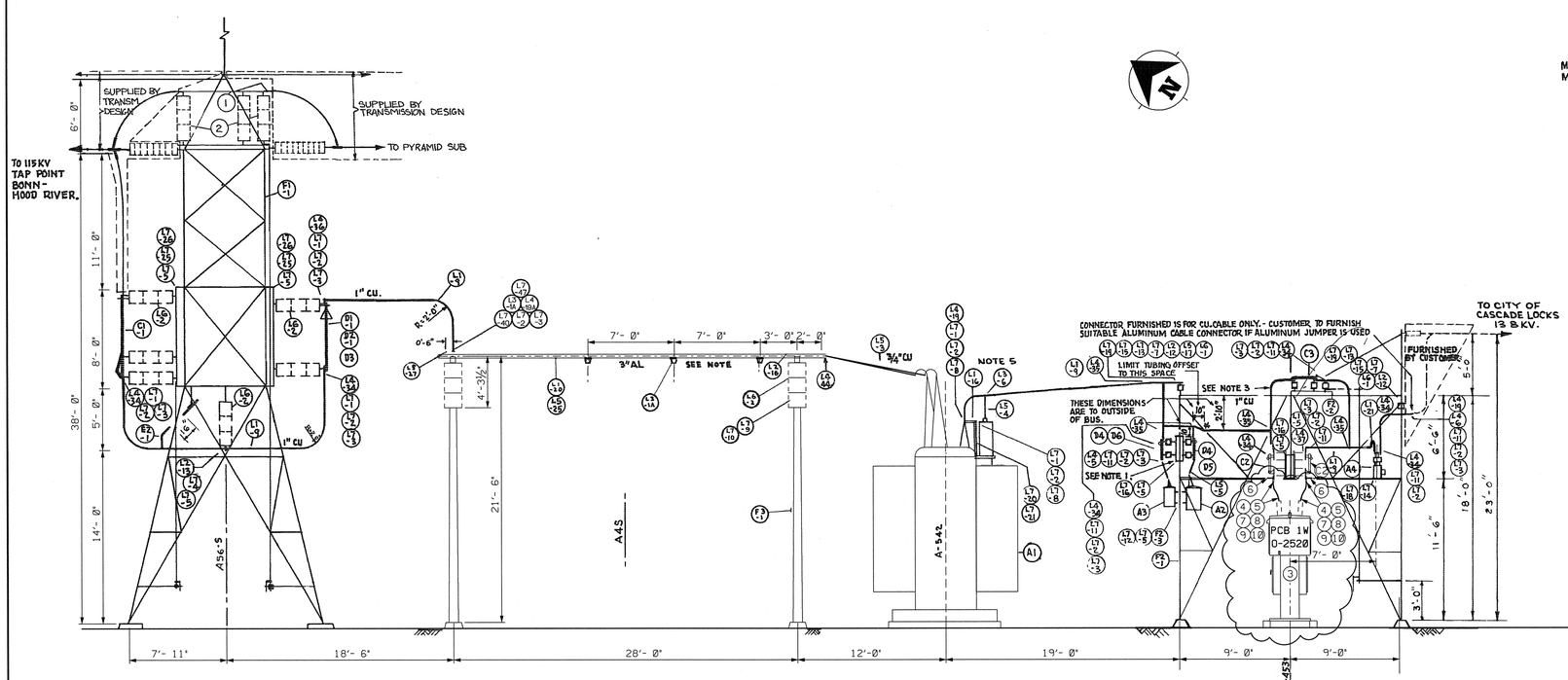

ELEVATION.

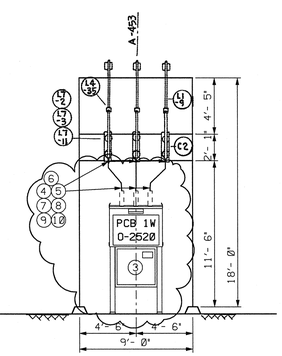

SECTION D-D

NOTE:
THE FOLLOWING PARTS TO BE SENT TO SHOP FOR FABRICATING INTO SINGLE BUS PIECES, 1 FOR EACH PHASE. SEE PLAN.
L1-2G ; 3" IPS AL. BUS TUBING.
L2-1G ; 3" IPS BUS SUPPORTS.
L3-1A ; TEE CONNECTORS.
L4-4A ; 3" IPS TUBE TERMINALS.
L5-2S ; DAMPPING CABLES.
L5-27 ; 3" IPS CORONA BELLS.

SCALE: 3/16" = 1'-0"

NOTES:
1 DRILL HOLES IN MK2A TO MOUNT MK5A'S 4" BELOW EXISTING POSITION OF MK5A'S THIS IS NECESSARY TO PROVIDE REQUIRED PHASE TO GROUND CLEARANCE.
2 * MINIMUM CLEARANCE BETWEEN THE LIVE PARTS SHALL NOT BE LESS THAN 15" FOR PHASE TO PHASE AND 10" FOR PHASE TO GROUND.
3 RADIUS OF TUBING & FOR ALL BENDS SHALL BE 10" UNLESS SHOWN OTHERWISE.
4 2'-10" DIMENSION IS TO OUTSIDE OF BUS
5 CONNECT NEUTRAL BUSHING TO L.A. GROUNDING BAR WITH 1/4" X 3" CU BAR TO SUIT. INSTALL ITEM N2-8 ON EXISTING L.A. GROUNDING PAD FOR CONNECTIONS TO GROUND MAT

DRAWING NUMBER	SHEET	TITLE
285586-SOE-BM	1	BM ITEMS 3-12 (W.O.224583)FA
227705-NTB-BM	1	BM ITEMS 1-2
110049	1	BILL OF MATERIAL (C)
110044-48	1-5	BILL OF MATERIAL (FA)

REFERENCE DRAWINGS

NO.		W.O.	REVISION	BY	DATE	APPROVED
2	FA	00224583	REPL. 13.8KV PCB 1W. REVISION 1 DATED 05/08/59 CONVERTED TO HYBRID	DE	3-25-09	MT SCP
	FA	00224583	COMPUTER REVISION ONLY			

C=CONTRACT CONSTRUCTION, FA=FORCE ACCOUNT CONSTRUCTION, R=RECORD

DSGN BPA
DRWN DE
CHKD
REVW
CNCR
APPR
DATE 3-27-09

UNITED STATES DEPARTMENT OF ENERGY
BONNEVILLE POWER ADMINISTRATION
HEADQUARTERS, PORTLAND, OREGON

CASCADE LOCKS SUBSTATION EQUIPMENT LAYOUT

C-2

SERIAL	SOURCE	SIZE	SHEET	REVISION
110043	SOE	D	1 OF 2	2